REVISIONS				
ZONE	REV	DESCRIPTION	DATE	APPROVED

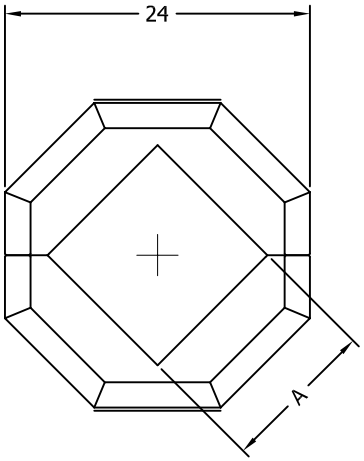

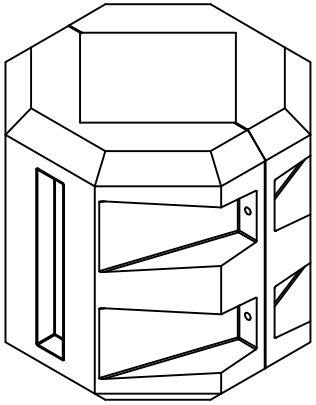

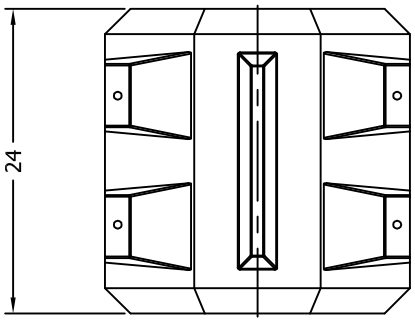

MODEL	A
CPSH-6	6 1/4
CPSH-8	8 1/4
CPSH-10	10 1/4
CPSH-12	12 1/4

DRAWN JHN	DATE 1/22/16	DIVERSIFIED PLASTICS, INC
CHECKED		CPSH SERIES COLUMN PROTECTOR
QA		
MFG		SIZE D · PSCH NO. · DWG NO. D-3426-5 · REV
APPROVED		SCALE 1:5 · SHEET